Active Antenna

Short of antenna space? Try this active antenna from Robert Penfold.

A move to a new QTH and the loss of the old long-wire antenna prompted the design of this project to act as a stop-gap measure until a new antenna could be installed. The first solution to the problem was a standard curtain rail style indoor antenna which gave reasonable results on the high frequency bands, but this ultimately proved to be an inadequate solution due to the mediocrity of results on the medium frequency (m.f.) bands.

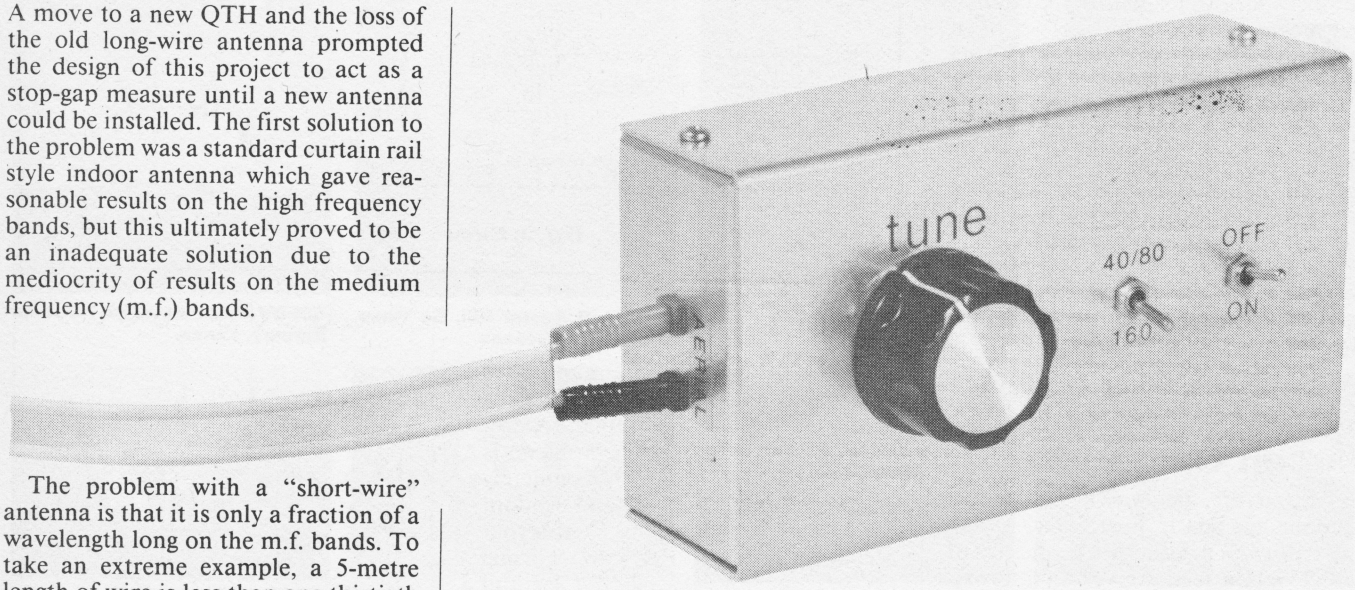

The problem with a "short-wire" antenna is that it is only a fraction of a wavelength long on the m.f. bands. To take an extreme example, a 5-metre length of wire is less than one thirtieth of a wavelength when used for reception on the 1·8MHz (160m) amateur band. Apart from the reduced signal pickup that this produces, it also results in the antenna having a high output impedance. Most short wave receivers have a low input impedance, and the antenna, like any high impedance signal source when fed into a low input impedance, produces only a low voltage level due to loading effects. The antenna is effectively a voltage source in series with a resistor, the latter having a value equal to the output impedance of the antenna. This resistor forms a potential divider in conjunction with the input impedance of the receiver, as shown in Fig. 1. If the antenna has an output impedance of 1000Ω and the input impedance of the receiver is 50Ω, this would result in the signal voltage from the antenna being reduced by a factor of 21 when connected to the receiver (1000 + 50 = 1050. 1050 ÷ 50 = 21).

Although only given as a mathematical example these figures are not unreasonable.

Active Antenna

One way of overcoming the impedance matching problem is to use an antenna tuning unit or some other passive matching device. However, the impedance step-down is achieved at the expense of a loss in signal voltage, and the signal fed to the receiver is still likely to be less than the unloaded output voltage of the antenna. Antenna tuning units are generally most beneficial when used with medium and long antennas.

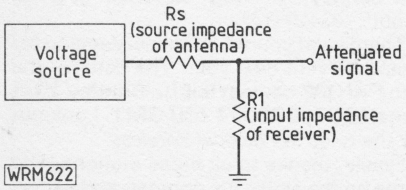

Fig. 1: The theoretical diagram showing the effective voltage source the antenna represents to a receiver

A better solution is to use a so-called "active" antenna which is really just a passive antenna of some kind feeding into a wideband pre-amplifier. There are several types of active antenna but the most basic type consists of a wideband amplifier fed from a simple wire antenna a few metres long. The main purpose of the amplifier is to provide an impedance match without introducing any large drop in signal amplitude, but in most cases the amplifier also provides a certain amount of voltage amplification.

Tuned Lines

The unit described here can be used in this way, and will provide good results on any of the short wave bands. However, if the m.f. bands are the main ones of interest it is possible to obtain improved results using a tuned antenna in place of the simple wire type. The antenna used in this case is a tuned line. Readers may be familiar with tuned lines in v.h.f. and (more commonly) u.h.f. circuits where they can be used to replace ordinary r.f. transformers. In v.h.f. and u.h.f. circuits the lines are normally just pieces of p.c.b. track. This is made possible by the short wavelengths involved. For a low frequency tuned line, 300Ω balanced feeder probably represents the most convenient basis for the antenna. The arrangement used is shown in Fig. 2. The first point to note is that one end of the balanced feeder line is shorted together and the signal is extracted from the two conductors at the opposite end of the line. It is not necessary for the antenna to be one quarter of a wavelength long since a tuning capacitor can be used to effectively lengthen the antenna and resonate it at the appropriate frequency. In practice there is bound to be a certain amount of stray capacitance to contend with, and cutting the antenna short and using a variable capacitor to peak performance on the desired band is the most practical way of doing things. A few experiments showed that 5 metres of 300Ω balanced feeder could be made to operate effectively on the 7, 3·5 and 1·8MHz bands with the aid of a suitable tuning capacitance.

Selectivity

The antenna could be regarded as a single-turn tuned circuit, and like an ordinary tuned circuit it has a high output impedance. Accordingly, good results cannot be expected if the antenna is coupled direct to a receiver, and the use of a buffer amplifier is just as important as when using a "short wire" antenna.

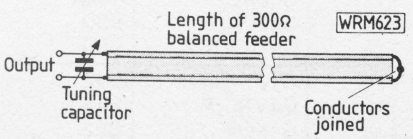

Fig. 2: Simplified view of a tuned line

There are three main advantages in using the tuned line antenna rather than a simple wire type. One is merely that the tuned line system seems to give a significantly higher signal level than a simple wire antenna of similar length. Secondly, the antenna is effectively an additional tuned circuit in the r.f. circuits of the receiver, and the extra r.f. selectivity it provides helps to combat spurious responses. Last but by no means least, it gives less of a problem with cross-modulation. This is a common problem with active antennas since the antenna element picks up signals over a wide bandwidth, and some of the signals are inevitably quite strong. This plethora of signals can easily result in overloading of the pre-amplifier and strong cross-modulation. With its narrower bandwidth a tuned antenna is less likely to be troubled by strong out-of-band signals.

Circuit Operation

The circuit diagram of the active antenna appears in Fig. 3. The tuning capacitor C3, together with 5 metres of 300Ω ribbon feeder gives an approximate frequency coverage of 3·2 to 7·5MHz, this means that in addition to covering the 7·0MHz and 3·5MHz amateur bands it also gives coverage of the 7·1MHz, 6MHz, 5MHz and 4MHz broadcast bands. Switch S1 is used to connect extra capacitance C2 in parallel with C3, together they bring the antenna to resonance at approximately 1·8MHz, C3 will tune the antenna anywhere within the frequency limits of the amateur Top Band. If the unit is used with a simple wire antenna C2, S1 and C3 should be omitted.

Transistors Tr1 and Tr2 form a cascode amplifier with Tr1 acting as a common source stage and Tr2 operating in the common base mode. Resistor R1 is the gate bias resistor for Tr1, and being a j.f.e.t. it provides a suitable high impedance. Inductor L1 is the collector load for Tr2, this is damped by R3 in order to avoid instability. Transistor Tr3 is a common emitter buffer stage which gives the circuit a low output impedance so that it can drive the low input impedance of a receiver efficiently. Capacitor C6 provides d.c. blocking at the output, and this is essential as the input of the receiver is likely to connect to the primary of an r.f. transformer. Without C6 there would be a very low resistance from the emitter of Tr3 to earth if the unit was connected to the receiver, and Tr3 would be destroyed.

The current consumption of the circuit is about 9 milliamps. This can be supplied by a small 9 volt battery such as a 6–F22 (PP3) type. If the unit is to be permanently installed in an inaccessible position, it may be more practical to build a well smoothed battery eliminator, but the mains transformer should not be mounted close to L1.

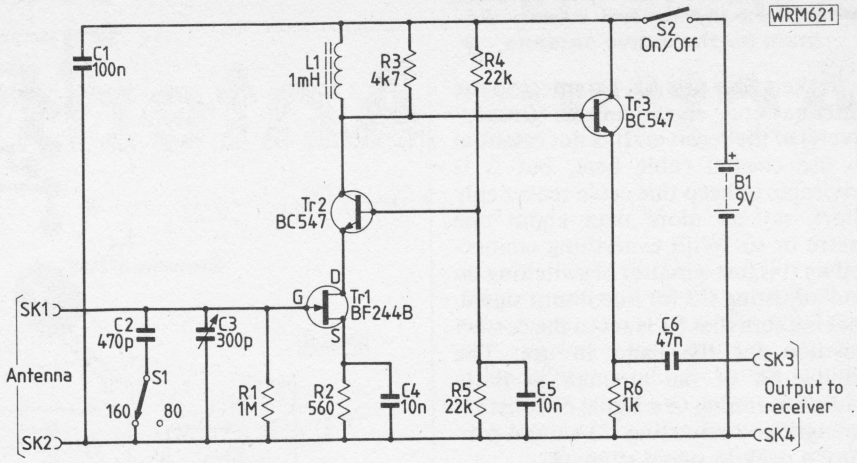

Fig. 3: Circuit diagram

Construction

Details of the printed circuit board are given in Fig. 4. Construction of the board is extremely straightforward, and the only likely cause of problems is Tr1. The BF244B has two completely different encapsulations and leadout configurations. The component layout diagram assumes that the normal (TO92) version is used, but leadout details for the alternative type are included in Fig. 4.

If a small 9 volt battery is to be used as a power source the unit will fit comfortably into an aluminium box measuring 70 × 133 × 38mm, but a larger type will almost certainly prove to be necessary if another form of power source is used. The internal layout is not critical, but it is advisable to site C3 and S1 fairly close together as C2 is wired directly between these two components and not on the p.c.b.

The antenna just consists of 5 metres of 300Ω balanced feeder with a short length of insulation stripped from the wire at both ends of the cable. The two wires are bent round and soldered together at one end, while the wires at the other end are fitted with 2mm plugs. The latter plug into SK1 and SK2, which should consequently be mounted close together on the case (about 10mm apart).

In Use

The antenna can be installed permanently by fixing it around a curtain rail, or whatever, or you can use it by simply rolling out the antenna wire when the unit is needed, and rolling it up again after each session. It is not essential to have the wire perfectly straight, and even a right-angled bend will not seriously impair its performance. The antenna has directional properties, with maximum pickup at right angles to the antenna wire. However, bends in the wire reduce the directivity of the antenna. Height is an advantage for practically any antenna, but good results have been obtained just by laying the antenna wire along the floor of a ground floor room.

SHOPPING LIST

Resistors
¼W 5% Carbon film

560Ω	1	R2
1kΩ	1	R6
4·7kΩ	1	R3
22kΩ	2	R4,5
1MΩ	1	R1

Capacitors
Ceramic

470pF	1	C2
100nF	1	C1

Polyester

10nF	2	C4,5
47nF	1	C6

Variable solid dielectric

300pF(1)	1	C3

Semiconductors

BF244B(2)	1	Tr1
BC547	2	Tr2,3

Inductors

1mH(2)	1	L1

Miscellaneous
SPST sub-miniature toggle switch (2); 2mm sockets (4); 2mm plugs (4); aluminium box 70 × 133 × 38mm; control knob; battery lead with connectors; 5 metres of 300Ω balanced feeder; p.c.b.; connecting wire.

(1) Maplin Electronic Supplies Ltd., P.O. Box 3, Rayleigh, Essex SS6 8LR. Tel: 0702 554155.

(2) Cricklewood Electronics Ltd., 40 Cricklewood Broadway, London NW2 3ET. Tel: 01-450

Fig. 4: Full-size p.c.b. track pattern, component layout and wiring diagram for the active antenna ▶

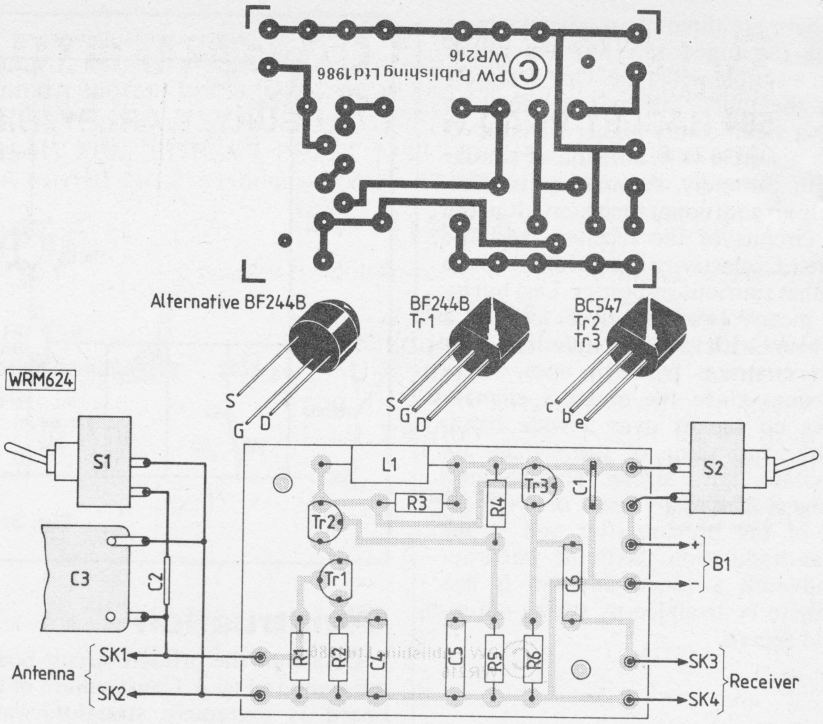

Sockets SK3 and SK4 connect to the antenna and earth sockets (respectively) of the receiver. It is not essential to use coaxial cable here, but it is advisable to keep this cable reasonably short, say no more than about one metre or so. With everything connected up it is just a matter of switching on and adjusting C3 for maximum signal, making sure that S1 is set to the correct position for the band in use. The bandwidth of the antenna is fairly wide, but tuning to a signal of constant strength and adjusting C3 should produce a peak in signal strength.

There is plenty of scope for experimentation, and if a long antenna can be accommodated it might give better results, but a lower value tuning capacitor would be required. Of course, making the antenna longer reduces the maximum frequency at which it can be brought to resonance. Although the unit was not designed with the h.f. bands in mind, by using a shorter antenna it should be possible to produce a compact but efficient antenna for one or more of the h.f. bands. Using about 2 metres of feeder gives good results on 21MHz and 14MHz.

If the unit is used with a simple wire antenna it is important that it is not over 6 metres long, as a longer antenna would overload the pre-amplifier for most of the time.

Results with the antenna and a Trio QR666 receiver have been encouraging, and W/VK stations on 3·5MHz, for example, are received at least as well as when using a 20-metre long-wire antenna at a height of about 6 metres. ***PW***

How Much? & How Difficult?
£15
Beginner

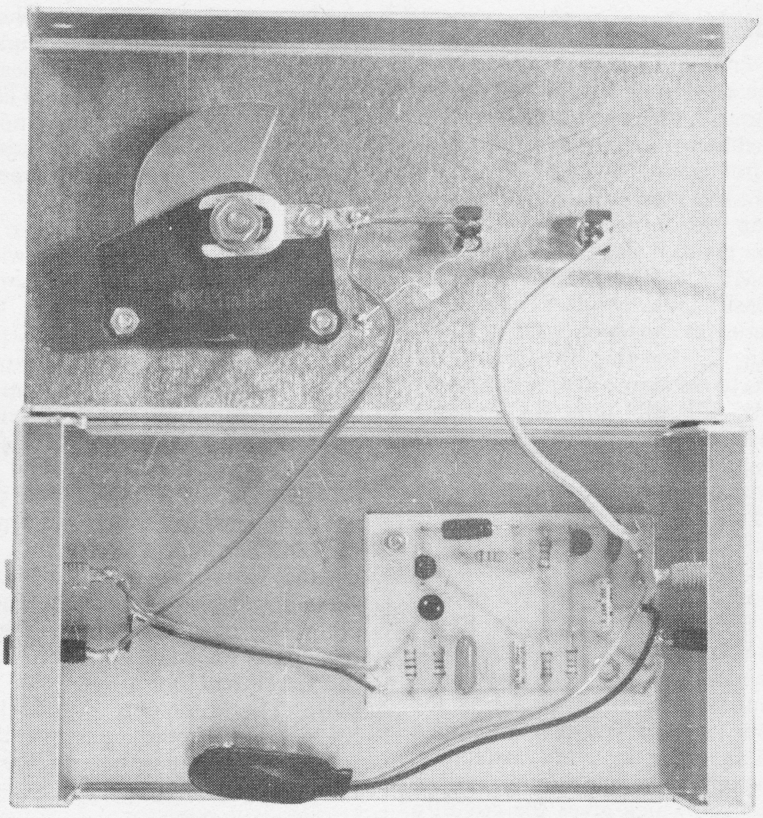

Internal view of the author's prototype of the active antenna ▶